BRITISH STANDARD

BS EN 1822-5:2009

# High efficiency air filters (EPA, HEPA and ULPA)

## Part 5: Determining the efficiency of filter elements

ICS 13.040.40; 23.120



British Standards

# National foreword

This British Standard is the UK implementation of EN 1822-5:2009. It supersedes BS EN 1822-5:2000 which is withdrawn.

The UK participation in its preparation was entrusted to Technical Committee MCE/21/3, Air filters other than for air supply for I.C. engines and compressors.

A list of organizations represented on this committee can be obtained on request to its secretary.

This publication does not purport to include all the necessary provisions of a contract. Users are responsible for its correct application.

**Compliance with a British Standard cannot confer immunity from legal obligations.**

This British Standard was published under the authority of the Standards Policy and Strategy Committee on 31 January 2010



**ISBN 978 0 580 61794 2**

**Amendments/corrigenda issued since publication**

| Date | Comments |
|---|---|
| | |
| | |
| | |
| | |

EUROPEAN STANDARD

NORME EUROPÉENNE

EUROPÄISCHE NORM

# EN 1822-5

November 2009

ICS 13.040.40

Supersedes EN 1822-5:2000

English Version

# High efficiency air filters (EPA, HEPA and ULPA) - Part 5: Determining the efficiency of filter elements

Filtres à air à haute efficacité (EPA, HEPA et ULPA) - Partie 5: Mesure de l'efficacité de l'élément filtrant

Schwebstofffilter (EPA, HEPA und ULPA) - Teil 5: Abscheidegradprüfung des Filterelements

This European Standard was approved by CEN on 17 October 2009.

CEN members are bound to comply with the CEN/CENELEC Internal Regulations which stipulate the conditions for giving this European Standard the status of a national standard without any alteration. Up-to-date lists and bibliographical references concerning such national standards may be obtained on application to the CEN Management Centre or to any CEN member.

This European Standard exists in three official versions (English, French, German). A version in any other language made by translation under the responsibility of a CEN member into its own language and notified to the CEN Management Centre has the same status as the official versions.

CEN members are the national standards bodies of Austria, Belgium, Bulgaria, Cyprus, Czech Republic, Denmark, Estonia, Finland, France, Germany, Greece, Hungary, Iceland, Ireland, Italy, Latvia, Lithuania, Luxembourg, Malta, Netherlands, Norway, Poland, Portugal, Romania, Slovakia, Slovenia, Spain, Sweden, Switzerland and United Kingdom.

EUROPEAN COMMITTEE FOR STANDARDIZATION
COMITÉ EUROPÉEN DE NORMALISATION
EUROPÄISCHES KOMITEE FÜR NORMUNG

**Management Centre: Avenue Marnix 17, B-1000 Brussels**



Ref. No. EN 1822-5:2009: E

# Contents

Page

**Foreword** ..... 4

**Introduction** ..... 5

**1 Scope** ..... 6

**2 Normative references** ..... 6

**3 Terms and definitions** ..... 6

**4 Description of the method** ..... 7
**4.1 General** ..... 7
**4.2 Measurement method using fixed sampling probe** ..... 8
**4.3 Scan method** ..... 8
**4.4 Statistical efficiency test method for EPA filters (Group E)** ..... 8

**5 Test filter** ..... 9

**6 Test apparatus** ..... 9
**6.1 General** ..... 9
**6.2 Test duct** ..... 9
**6.2.1 Test air conditioning** ..... 9
**6.2.2 Adjustment of the volume flow rate** ..... 9
**6.2.3 Measurement of the volume flow rate** ..... 9
**6.2.4 Aerosol mixing section** ..... 9
**6.2.5 Test filter mounting assembly** ..... 9
**6.2.6 Measuring points for the pressure drop** ..... 10
**6.2.7 Sampling** ..... 10
**6.3 Aerosol generation and measuring instruments** ..... 11
**6.3.1 General** ..... 11
**6.3.2 Apparatus for testing with a monodisperse test aerosol** ..... 11
**6.3.3 Apparatus for testing with a polydisperse test aerosol** ..... 12

**7 Conditions of the test air** ..... 17

**8 Test procedure** ..... 17
**8.1 Preparatory checks** ..... 17
**8.2 Starting up the aerosol generator** ..... 17
**8.3 Preparation of the test filter** ..... 17
**8.3.1 Installation of the test filter** ..... 17
**8.3.2 Flushing the test filter** ..... 17
**8.4 Testing** ..... 18
**8.4.1 Measuring the pressure drop** ..... 18
**8.4.2 Testing with a monodisperse test aerosol** ..... 18
**8.4.3 Testing with a polydisperse test aerosol** ..... 18

**9 Evaluation** ..... 18

**10 Test report** ..... 20

**11 Maintenance and inspection of the test apparatus** ..... 22

**Annex A (informative) Testing and classification method for filters with MPPS ≤ 0,1 µm (e.g. membrane medium filters)** ..... 23
**A.1 Background** ..... 23
**A.2 MPPS of filters with Membrane filter medium** ..... 23
**A.3 Penetration consistency and uniformity of Membrane filter medium** ..... 23

**A.4 Procedure for testing and classification of filters with Membrane filter media ..... 23**
**A.4.1 Integral Penetration ..... 23**
**A.4.2 Classification ..... 24**
**A.4.3 Local Penetration ..... 24**
**A.5 Publication of data and labelling of products with membrane filter media ..... 24**

**Annex B (normative) Testing and classification of filters using media with (charged) synthetic fibers ..... 26**
**B.1 Background ..... 26**
**B.2 Scope ..... 26**
**B.3 Procedure for testing and classification of HEPA and ULPA filters using media with (charged) synthetic fibres ..... 26**
**B.4 Publication of data and labelling of products for HEPA and ULPA filters using media with (charged) synthetic fibres ..... 27**

**Bibliography ..... 28**

# Foreword

This document (EN 1822-5:2009) has been prepared by Technical Committee CEN/TC 195 “Air filters for general air cleaning”, the secretariat of which is held by UNI.

This European Standard shall be given the status of a national standard, either by publication of an identical text or by endorsement, at the latest by May 2010, and conflicting national standards shall be withdrawn at the latest by May 2010.

Attention is drawn to the possibility that some of the elements of this document may be the subject of patent rights. CEN [and/or CENELEC] shall not be held responsible for identifying any or all such patent rights.

This document supersedes EN 1822-5:2000.

It contains requirements, fundamental principles of testing and the marking for efficient particulate air filters (EPA), high efficiency particulate air filters (HEPA) and ultra low penetration air filters (ULPA).

EN 1822, *High efficiency air filters (EPA, HEPA and ULPA)*, consists of the following parts:

— *Part 1: Classification, performance testing, marking*

— *Part 2: Aerosol production, measuring equipment, particle counting statistics*

— *Part 3: Testing flat sheet filter media*

— *Part 4: Determining leakage of filter element (scan method)*

— *Part 5: Determining the efficiency of filter elements*

According to the CEN/CENELEC Internal Regulations, the national standards organizations of the following countries are bound to implement this European Standard: Austria, Belgium, Bulgaria, Cyprus, Czech Republic, Denmark, Estonia, Finland, France, Germany, Greece, Hungary, Iceland, Ireland, Italy, Latvia, Lithuania, Luxembourg, Malta, Netherlands, Norway, Poland, Portugal, Romania, Slovakia, Slovenia, Spain, Sweden, Switzerland and the United Kingdom.

## Introduction

As decided by CEN/TC 195, this European Standard is based on particle counting methods which actually cover most needs of different applications. The difference between this European Standard and previous national standards lies in the technique used for the determination of the integral efficiency. Instead of mass relationships, this technique is based on particle counting at the most penetrating particle size (MPPS), which is for micro-glass filter media usually in the range of 0,12 µm to 0,25 µm. This method also allows the testing test ultra low penetration air filters, which was not possible with the previous test methods because of their inadequate sensitivity.

For membrane and synthetic filter media, separate rules apply, see Annexes A and B of this standard.

## 1 Scope

This European Standard applies to efficient particulate air filters (EPA), high efficiency particulate air filters (HEPA) and ultra low penetration air filters (ULPA) used in the field of ventilation and air conditioning and for technical processes, e.g. for applications in clean room technology or pharmaceutical industry.

It establishes a procedure for the determination of the efficiency on the basis of a particle counting method using a liquid test aerosol, and allows a standardized classification of these filters in terms of their efficiency.

This part of the EN 1822 series deals with measuring the efficiency of filter elements, specifying the conditions and procedures for carrying out tests, describing a specimen test apparatus and its components, and including the method for evaluating test results.

## 2 Normative references

The following referenced documents are indispensable for the application of this document. For dated references, only the edition cited applies. For undated references, the latest edition of the referenced document (including any amendments) applies.

EN 779:2002, *Particulate air filters for general ventilation — Determination of the filtration performance*

EN 1822-1:2009, *High efficiency air filters (EPA, HEPA and ULPA) — Part 1: Classification, performance testing, marking*

EN 1822-2:2009, *High efficiency air filters (EPA, HEPA and ULPA) — Part 2: Aerosol production, measuring equipment, particle counting statistics*

EN 1822-3, *High efficiency air filters (EPA, HEPA and ULPA) — Part 3: Testing flat sheet filter media*

EN 1822-4, *High efficiency air filters (EPA, HEPA and ULPA) — Part 4: Determining leakage of filter element (scan method)*

EN 14799:2007, *Air filters for general air cleaning — Terminology*

EN ISO 5167-1, *Measurement of fluid flow by means of pressure differential devices inserted in circular cross-section conduits running full — Part 1: General principles and requirements (ISO 5167-1:2003)*

## 3 Terms and definitions

For the purposes of this document, the terms and definitions given in EN 14799:2007 and the following apply.

**3.1**
**sampling duration**
time during which the particles in the sampling volume flow are counted (upstream or downstream)

**3.2**
**measuring procedure with fixed sampling probes**
determination of the integral efficiency using fixed sampling probes upstream and downstream of the test filter

**3.3**
**total particle count method**
particle counting method in which the overall number of particles – without size classification – can be determined in a certain test volume (e.g. by using a condensation nucleus counter)

**3.4**
**particle counting and sizing method**
particle counting method which can determine both the number of particles and also their size distribution (e.g. by using an optical particle counter)

# 4 Description of the method

## 4.1 General

In order to determine the efficiency of the test filter it is fixed in the test filter mounting assembly and subjected to a test air volume flow corresponding to the nominal volume flow rate. After measuring the pressure drop at the nominal volume flow rate, the filter is purged with clean air and the test aerosol produced by the aerosol generator is mixed with the prepared test air along a mixing section, so that it is spread homogeneously over the cross section of the duct.

The efficiency is always determined for the most penetrating particle size (MPPS) (see EN 1822-3). The size distribution of the aerosol particles can optionally be measured using a particle size analysis system (for example a differential mobility particle sizer, DMPS).

The testing can be carried out using either a monodisperse or polydisperse test aerosol. When testing with (quasi-)monodisperse aerosol the total particle counting method can be used with a condensation nucleus counter (CNC) or an optical particle counter (OPC; for example a laser particle counter). It shall be ensured that the number median particle diameter corresponds to the MPPS, i.e. the particle diameter at which the filter medium has its minimum efficiency.

When using a polydisperse aerosol, an optical particle counter shall be used, which in addition to counting the particles is also able to determine their size distribution. It shall be ensured that the median diameter $D_M$ of the test aerosol lies in the range:

$$\frac{MPPS}{2} > D_M < MPPS \times 1{,}5$$

In order to determine the integral efficiency, representative partial flows are extracted on the upstream and downstream sides of the filter element and led to the attached particle counter to measure the number of particles.

The integral efficiency can be determined using one of two methods, either

— with fixed test sampling probes (see 4.2); or

— with one or several movable sampling probes downstream (scan method) (see 4.3).

In both methods the sample upstream is taken using a fixed sampling probe. The upstream and downstream number concentrations and the integral efficiency are calculated from the particle count, the duration of the sampling and the sampling volume flow rate.

## 4.2 Measurement method using fixed sampling probe

Using this method, the downstream sample used to determine the integral efficiency is taken using a fixed sampling probe. It is necessary to have a mixing section behind the test filter to mix the aerosol homogeneously with the test air over the duct cross section (see 6.2.4).

## 4.3 Scan method

This integral efficiency can be determined by averaging the readings from the result of the leak test (scan method). The test rig for the scan method is described in EN 1822-4.

In the scan method the downstream sampling is carried out directly behind the test filter using one or several moveable sampling probes, which can traverse the entire cross sectional area of the filter and its frame in overlapping tracks without any gaps.

The test apparatus corresponds largely with that used with stationary sampling probes. The differences in the scanning method are that the downstream mixing section is not included and instead a three-dimensional tracking system is included downstream which moves the probe(s). Since the test duct is usually open, provisions shall be made to prevent the intrusion of contaminated outside air into the test air flow. The arrangement of this test apparatus is described in EN 1822-4.

In the scan method all the particles counted during the entire downstream scan in the course of the leak testing are added together. The duration of the sampling is derived from the data of the scanning and the number of probes.

The further clauses of this standard refer solely to the measuring method with fixed sampling probes where the integral efficiency is determined independently from the leak test procedure.

## 4.4 Statistical efficiency test method for EPA filters (Group E)

One of the test procedures as described in 4.2 and 4.3 must be used for EPA filters. However for EPA filters the efficiency test does not have to be carried out for each single filter element (as this is mandatory for HEPA [Group H] and ULPA filters [Group U]). The integral efficiency of EPA filters shall be determined by averaging the results of the statistical efficiency tests as described below.

A record of the filter data according to Clause 10 is required in the form of a type test certificate or alternatively a factory test certificate. However, the supplier shall be able to provide documentary evidence to verify the published filter data upon request. This can be done by either:

— maintaining a certified quality management system (e.g. EN ISO 9000), which forces him to apply statistically based methods for testing and documenting efficiency for all EPA filters as per EN 1822 (all parts); or

— using accepted statistical methods to test all of his production lots of EPA filters. Either the “skip lot procedure” as described in ISO 2859-1 may be used or any equivalent alternative method.

NOTE This “skip lot procedure” as described in ISO 2859-1 implies that, at the beginning, the test frequency is high and is in the course of further testing reduced as the production experience grows and the products produced are conform to the target. As an example: the first eight production lots, 100 % of the produced filters are tested. If all the tests are positive, the frequency is reduced to half for the next eight production lots. If all the tests are positive again it is reduced to half again, and so on until only one out of eight lots has to be tested (= minimum test frequency). Each time, one of the tested filters fails; the test frequency is doubled again. In any case the number of samples tested per lot should be more than three filters.

# 5 Test filter

The filter element to be tested shall show no signs of damage or any other irregularities. The filter element shall be handled carefully and shall be clearly and permanently marked with the following details:

a) Designation of the filter element;

b) Upstream side of the filter element.

The temperature of the test filter during the testing shall correspond with that of the test air.

# 6 Test apparatus

## 6.1 General

A flow sheet showing the arrangement of apparatus comprising a test rig is given in Figure 4 of EN 1822-1:2009. An outline diagram of a test rig is given in Figure 1 of this standard.

The fundamentals of aerosol generation and neutralisation with details of suitable types of equipment as well as detailed descriptions of the measuring instruments needed for the testing are contained in EN 1822-2.

## 6.2 Test duct

### 6.2.1 Test air conditioning

The test air conditioning equipment shall comprise the equipment needed to control the condition of the test air so that it may be brought in compliance with the requirement of Clause 7.

### 6.2.2 Adjustment of the volume flow rate

Filters shall always be tested at their nominal air flow rate. It shall be possible to adjust the volume flow rate by means of a suitable provision (e.g. by changing the speed of the fan, or with dampers) to a value ± 5 % of the nominal flow rate which shall then remain constant within ± 2 % throughout each test.

### 6.2.3 Measurement of the volume flow rate

The volume flow rate shall be measured using a standardized or calibrated method (e.g. measurement of the differential pressure using standardized damper equipment such as orifice plates, nozzles, Venturi tubes in accordance with EN ISO 5167-1).

The limit error of measurement shall not exceed 5 % of the measured value.

### 6.2.4 Aerosol mixing section

The aerosol input and the mixing section (see example in Figure 1) shall be so constructed that the aerosol concentration measured at individual points of the duct cross section, directly in front of the test filter, shall not deviate by more than 10 % from the mean value of at least 9 measuring points, over the channel cross section.

### 6.2.5 Test filter mounting assembly

The test filter mounting assembly shall ensure that the test filter can be sealed and subjected to flow in accordance with requirements.

It shall not obstruct any part of the filter cross sectional area.

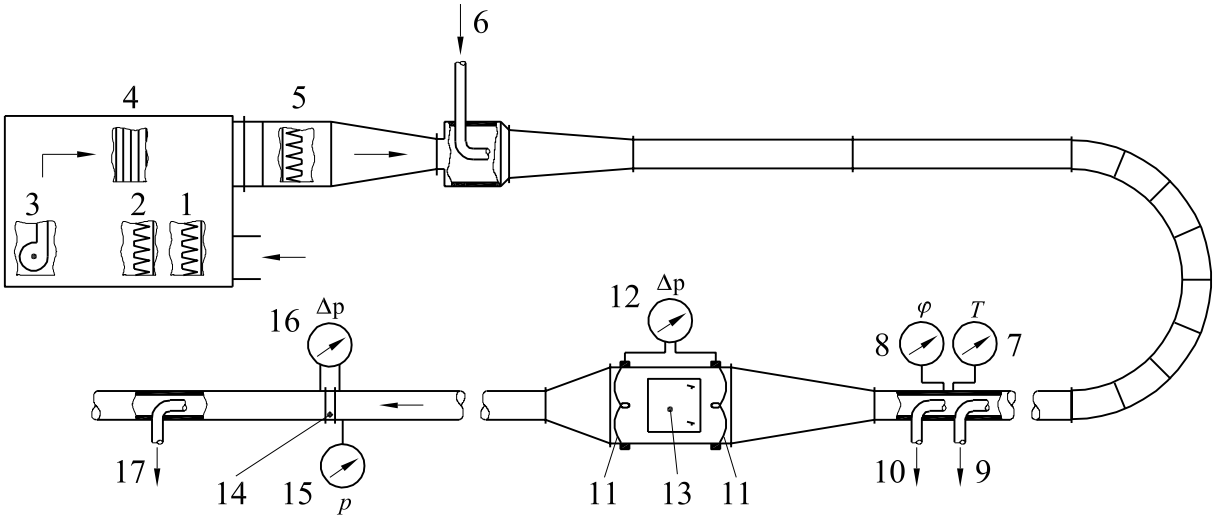


**Key**

1 Coarse dust filter

2 Fine dust filte

3 Fan

4 Air heating

5 High efficiency air filter

6 Aerosol inlet to the test duct

7 Temperature measurement

8 Hygrometer

9 Sampler, particle size analysis

10 Sampler, upstream

11 Ring pipe for differential pressure measurement

12 Manometer

13 Test filter mounting assembly

14 Measuring damper in accordance with EN ISO 5167-1

15 Measurement of absolute pressure

16 Manometer measuring differential pressure

17 Sampler, downstream

**Figure 1 — Example of a test rig**

### 6.2.6 Measuring points for the pressure drop

The measuring points for pressure drop shall be so arranged that the mean value of the static pressure in the flow upstream and downstream of the filter can be measured. The planes of the pressure measurements upstream and downstream shall be positioned in regions of an even flow with a uniform flow profile.

In rectangular or square test ducts, smooth holes with a diameter of 1 mm to 2 mm for the pressure measurements shall be bored in the middle of the channel walls, normal to the direction of flow. The four holes shall be interconnected with a circular pipe.

### 6.2.7 Sampling

In order to determine the efficiency, partial flows are extracted from the test volume flow by sampling probes and led to the particle counters. The diameter of the probes shall be chosen so that isokinetic conditions pertain in the duct at the given volume flow rate for the sample. In this way sampling errors can be neglected due to the small size of the particles in the test aerosol. The connections to the particle counter shall be as short as possible. Samples on the upstream side are taken by a fixed sampling probe

in front of the test filter. The sampling shall be representative, which is taken to be the case when the aerosol concentration measured from the sample does not deviate by more than ± 10 % from the mean value determined in accordance with 6.2.4.

A fixed sampling probe is also installed downstream, preceded by a mixing section which ensures a representative measurement of the downstream aerosol concentration. This is taken to be the case when, in event of a leak in the test filter according to Clause 5 of EN 1822-1:2009, the aerosol concentration measured does not at any point deviate by more than ± 10 % from the mean value of at least nine measuring points over the duct cross section.

The mean aerosol concentrations determined at the upstream and downstream sampling points without the filter in position shall not differ from each other by more than 5 %.

## 6.3 Aerosol generation and measuring instruments

### 6.3.1 General

The operating parameters of the aerosol generator shall be adjusted to produce a test aerosol whose number median diameter is in the range of the Most Penetrating Particle Size (MPPS) for the sheet filter medium.

The median size of the monodisperse test aerosol may not deviate from the MPPS by more than ± 10 %. A deviation of ± 50 % is allowed when using a polydisperse aerosol.

The particle output of the aerosol generator shall be adjusted according to the test volume flow rate and the filter efficiency so that the counting rates on the upstream and downstream sides lie under the coincidence limits of the counter (coincidence error max. 5 %), and significantly above the zero count rate of the instruments.

The number distribution concentration of the test aerosol can be determined using a suitable particle size analysis system (e.g. a differential mobility particle sizer - DMPS) or with a laser particle counter suitable for these test purposes. The limit error of the measurement method used to determine the number median value shall not exceed ± 20 % (relative to the measurement value).

The number of counted particles measured upstream and downstream shall be sufficiently large to provide statistically meaningful results, without the concentration exceeding the measuring range of the upstream particle counter. If the upstream number concentration exceeds the range of the particle counter (in the counting mode), a dilution system shall be inserted between the sampling point and the counter.

The particle counting can be carried out using either a pair of counters operating in parallel on the upstream and downstream sides, or using a single counter to measure the number concentrations on the upstream and downstream sides alternately. If measurements are made with only one counter then it shall be ensured that the relevant properties of the test aerosol (for example, the number concentration, particle size distribution, homogeneous distribution over the channel cross section) remain constant over time. If two counters are used in parallel both should be of the same type and calibrated as dual devices.

### 6.3.2 Apparatus for testing with a monodisperse test aerosol

For technical reasons, the particle size distribution produced by the aerosol generator is usually quasi-monodisperse.

When using a monodisperse aerosol for the efficiency testing of the filter element, not only optical particle counters but also condensation nucleus counters may be used.

When using a condensation nucleus counter it shall be ensured that the test aerosol does not contain appreciable numbers of particles which are very much smaller than the MPPS. Such particles, which may be produced, for example, by an aerosol generator which is no longer working properly, are also counted by a condensation nucleus counter and can lead to a considerable error in the determination of the efficiency. One way of checking this is to determine the number distribution of the test aerosol with a measuring device which stretches over a range from the lower range limit of the condensation nucleus counter up to a particle size of approximately 1 µm. The number distribution thus determined shall be quasi-monodisperse.

The test apparatus for testing with monodisperse aerosol is shown in Figure 2.

#### 6.3.3 Apparatus for testing with a polydisperse test aerosol

When determining the efficiency of a filter element using a polydisperse test aerosol, the particle number concentration and size distribution shall be determined using an optical particle counter (e.g. laser particle counters).

The test apparatus for testing with polydisperse aerosol is shown in Figure 3.

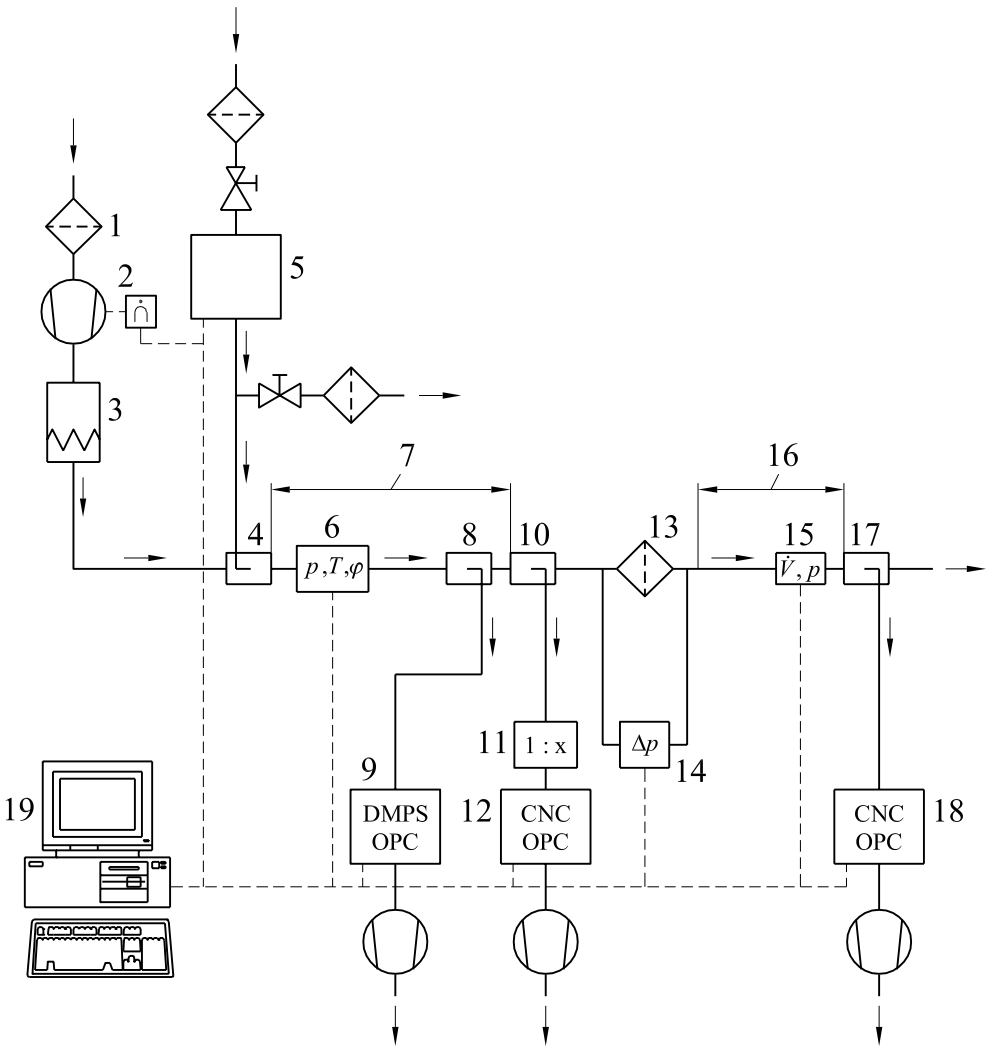


**Key**

1 Pre-filter for test air

2 Fan with variable speed control

3 Air heater

4 Aerosol inlet in the duct

5 Aerosol generator for the monodisperse aerosol

6 Measurement of temperature, barometric pressure and relative humidity

7 Upstream side mixing section

8 Sampling point for particle size analysis

9 Particle size analysis system (DMPS or OPC)

10 Sampling point for upstream particle counting

11 Dilution system (optional)

12 Upstream particle counter (CNC or OPC)

13 Test filter

14 Measurement of pressure drop across the test filter

15 Measurement of absolute pressure and volume air flow rate

16 Downstream mixing section

17 Sampling point for downstream particle counting

18 Downstream particle counter (CNC or OPC)

19 Computer for purposes of control and measurement recording

**Figure 2 — Test apparatus for testing with a monodisperse aerosol**

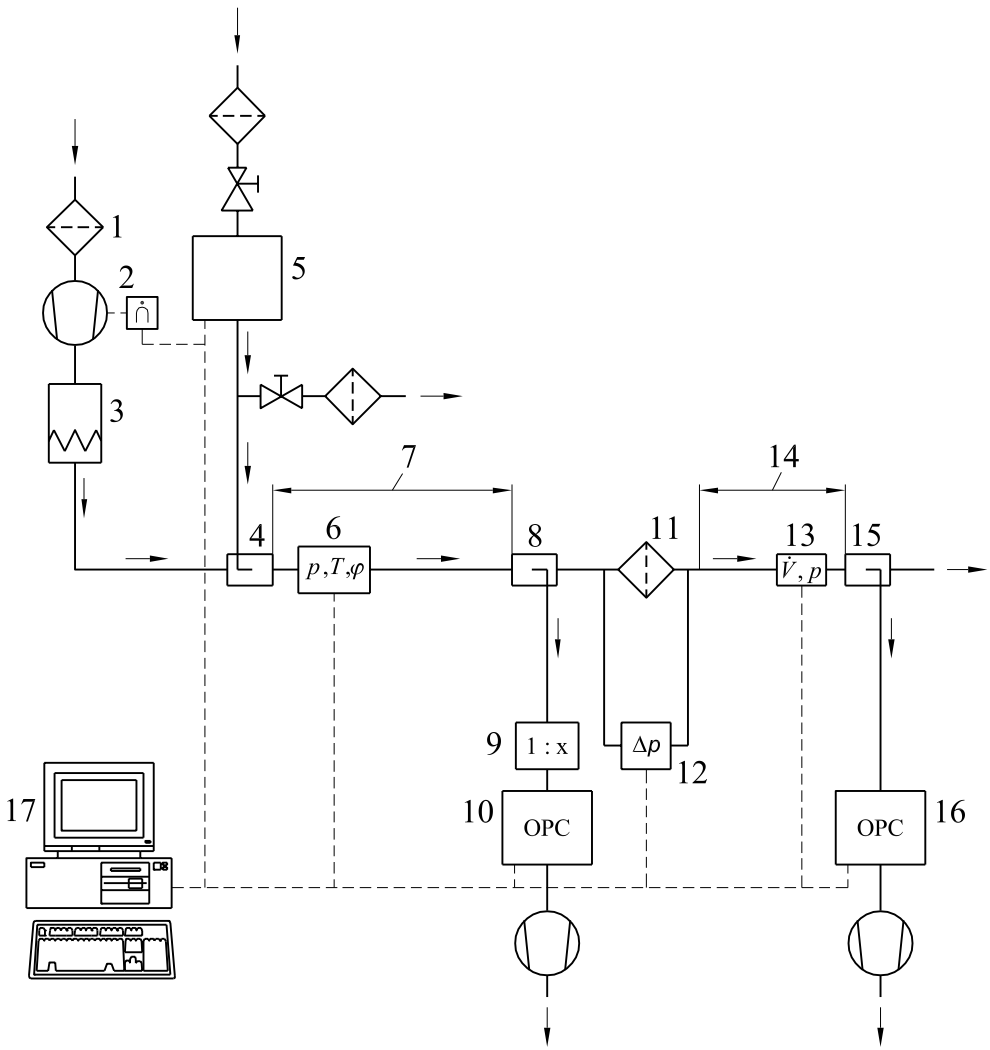


**Key**

1 Pre-filter for test air
2 Fan with variable speed control
3 Air heater
4 Aerosol inlet in the duct
5 Aerosol generator for the polydisperse aerosol
6 Measurement of temperature, barometric pressure and relative humidity
7 Upstream side mixing section
8 Sampling point for upstream particle count
9 Dilution system (optional)
10 Upstream optical particle counter (OPC)
11 Test filter
12 Measurement of pressure drop of the test filter
13 Measurement of absolute pressure and volume air flow rate
14 Downstream mixing section
15 Sampling point for downstream particle count
16 Downstream optical particle counter (OPC)
17 Computer for control and measurement recording

**Figure 3 — Test apparatus for testing with a polydisperse aerosol**

The measuring range of the optical particle counter used in testing efficiency shall cover the following particle sizes:

MPPS/1,5 to MPPS x 1,5 (Range I, Figure 4)

The distribution of the size classes shall be such that each of the class limits meets one of the following conditions:

MPPS/2 < lower channel limit ≤ MPPS/1,5 (Range IIa, Figure 4)

MPPS x 1,5 ≤ upper channel limit < MPPS x 2 (Range IIb, Figure 4)

NOTE The measuring range of the optical particle counter used for efficiency testing should cover at least the following particle size range:

MPPS/1,5 to MPPS x 1,5 (Range I, Figure 4)

The distribution of the channel limits shall be such that there is one (lower) channel limit in the diameter range between MPPS/2 and MPPS/1,5 (Range IIa, Figure 4) and on (upper) channel limit in the diameter range between MPPS x 1,5 and MPPS x 2 (Range IIb, Figure 4).

All channels between these two limits can be evaluated to determine the filter efficiency. But it is not required that there must be more than one channel, so that the above condition can also be met, in an extreme case, by only one channel.

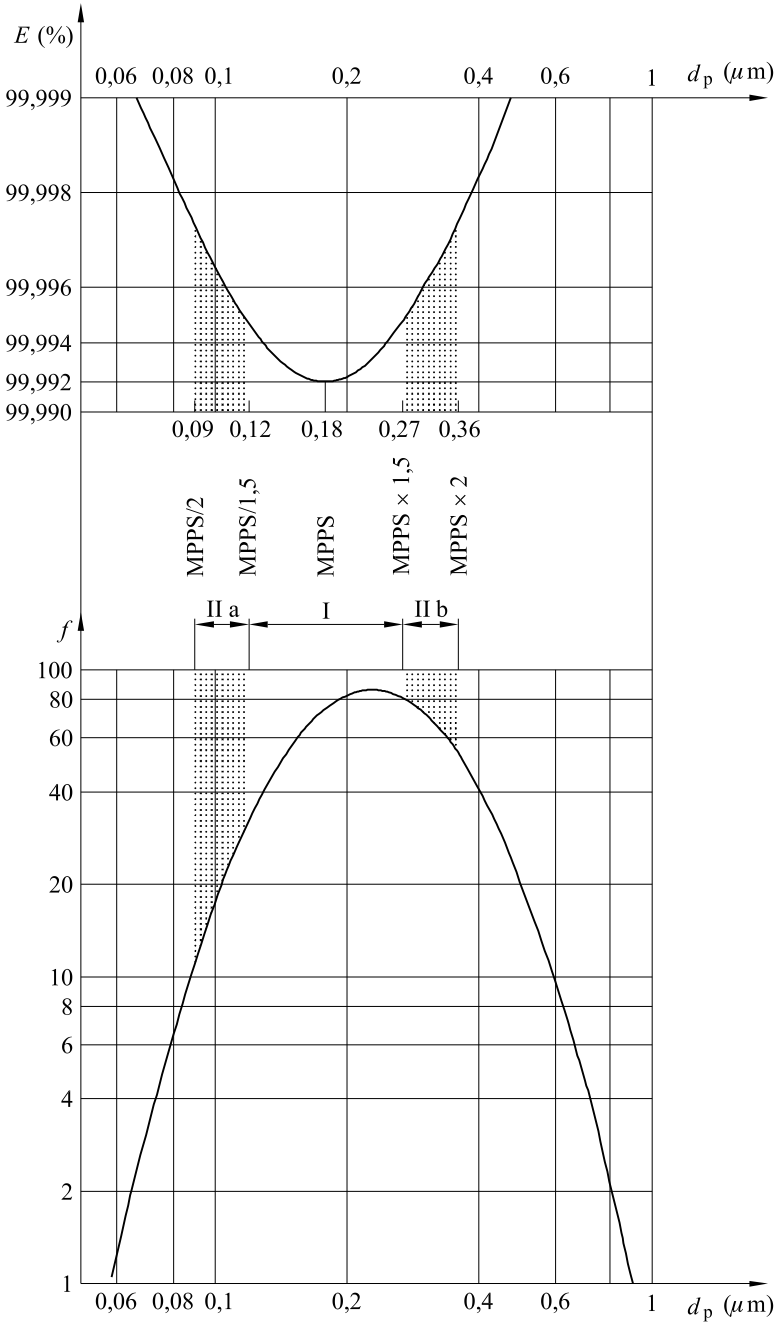


**Figure 4 — Fractional efficiency E and permissible measuring ranges relative to efficiency minimum (MPPS = 0,18 µm) and number distribution f of a polydisperse test aerosol with $d_p$ of 0,23 µm**

# 7 Conditions of the test air

The test air shall be conditioned before being mixed with the test aerosol such that its temperature, relative humidity and purity comply with the requirements specified in 6.1 of EN 1822-1:2009.

# 8 Test procedure

## 8.1 Preparatory checks

After switching on the test apparatus the following parameters shall be checked:

— Operational readiness of the measuring instruments:

The condensation nucleus counters shall be filled with operating liquid. The warming-up times specified by the instrument makers shall be observed.

— Zero count rate of the particle counter:

The measurement of the zero count rate shall be carried out using flushing air which is free of particles.

— Absolute pressure, temperature and relative humidity of the test air:

These parameters shall be checked to ensure that they comply with the specifications made in 6.1 of EN 1822-1:2009. If a parameter does not comply with the specifications made in EN 1822-1 and EN 1822-2 then appropriate corrections shall be made.

## 8.2 Starting up the aerosol generator

When starting up the aerosol generator a stand-by filter element shall be installed in the test filter mounting assembly.

After adjusting the operating parameters of the aerosol generator and observing an appropriate warming-up period, the particle concentration and the distribution of the test aerosol shall be checked to ensure that they comply with the requirements specified in 6.3. The test aerosol distribution and concentration shall be determined as close to the filter mounting assembly as possible.

## 8.3 Preparation of the test filter

### 8.3.1 Installation of the test filter

The test filter shall be handled in such a way as to ensure that the filter material is not damaged.

The test filter shall be installed in the mounting assembly with regard to air flow direction and gasketing side as it is foreseen for use.

The seal between the test filter and the test filter mounting assembly shall be free from leaks.

### 8.3.2 Flushing the test filter

In order to reduce the self-emission of particles by the test filter and to equalize the temperatures of the test filter and the test air, the test filter shall be flushed with test air for a suitably long period at the nominal volume flow rate. Following this, the residual self-emission can be measured at the downstream particle counter.

## 8.4 Testing

### 8.4.1 Measuring the pressure drop

The pressure drop across the test filter shall be measured in the unloaded state using the pure test air. The nominal volume flow rate shall be set up, as specified in 6.2.2. The measurements shall be made when a stable operating state has been reached.

### 8.4.2 Testing with a monodisperse test aerosol

In the mixing section the test air is mixed with test aerosol, the median diameter of which corresponds to the particle size at the efficiency minimum of the sheet filter medium - MPPS (deviation ± 10 %, see 6.3).

The particle concentrations are measured on the upstream and downstream sides. This can be carried out using either a pair of counters operating in parallel, or using a single counter to measure the particle concentrations on the upstream and downstream sides alternately. The upstream particle number concentration and the duration of measurement shall be chosen so that the difference between the counted and minimum particle number on the upstream side (corresponding to the lower limit of the 95% confidence range of a Poisson distribution; see EN 1822-2) does not vary by more than 5 % from the measured particle number (which corresponds to at least 1,5 x $10^3$ particles). On the downstream side the difference between the maximum particle number (corresponding to the upper limit of the 95 % confidence range of a Poisson distribution; see EN 1822-2) and the counted particle number shall not deviate by more than 20 % (which corresponds to at least 100 particles) from the measured particle number (see Table 1).

When choosing the measurement duration, care shall be taken that the test filter is not overburdened with aerosol.

### 8.4.3 Testing with a polydisperse test aerosol

The testing is done according to 8.4.2 using a polydisperse aerosol the median diameter of which shall not deviate from the MPPS by more than 50 % (see 6.3).

In contrast to the testing with a monodisperse test aerosol, when testing with a polydisperse test aerosol the number distribution concentration and the number concentration are measured using optical particle counters. In order to determine the efficiency, the upstream and downstream number concentrations are collected for all size classes which lie entirely or partially in the range MPPS/1,5 to MPPS x 1,5 (see 6.3.3).

# 9 Evaluation

The penetration P or the efficiency E is usually given as a percentage and calculated in the following way:

$$P = \frac{c_{\mathrm{N,d}}}{c_{\mathrm{N,u}}} \tag{1}$$

$$E = 1 - P \tag{2}$$

with

$$c_{N,d} = \frac{N_d}{\dot{V}_{s,d} \cdot t_d} \tag{3}$$

$$c_{N,u} = \frac{k_D \cdot N_u}{\dot{V}_{s,u} \cdot t_u} \tag{4}$$

where

$N_u$ is the number of particles counted upstream;

$N_d$ is the number of particles counted downstream;

$k_D$ is the dilution factor;

$c_{N,u}$ is the number concentration upstream;

$c_{N,d}$ is the number concentration downstream;

$\dot{V}_{s,u}$ is the sampling volume flow rate upstream;

$\dot{V}_{s,d}$ is the sampling volume flow rate downstream;

$t_u$ is the sampling duration upstream;

$t_d$ is the sampling duration downstream.

In order to calculate the minimum efficiency $E_{95\%,min}$, the less favourable limit value for the 95 % confidence range for the actual particle count shall be used as the basis for the calculations. The calculation shall be carried out taking into the account the particle counting statistics specified in Clause 7 of EN 1822-2:2009. The values for the 95 % confidence range shall only be calculated with pure counting data, without corrections being made for the dilution factor. The following applies:

$$E_{95\%min} = \left[ 1 - \frac{c_{N,d,95\%max}}{c_{N,u,95\%min}} \right] \times 100\ \% \tag{5}$$

$$N_{u,95\%min} = N_u - 1.96 \times N_u^{1/2} \tag{6}$$

$$c_{N,u,95\%min} = \frac{N_{u,95\%min} \times k_D}{\dot{V}_{s,u} \times t_u} \tag{7}$$

$$N_{d,95\%max} = N_d + 1.96 \times N_d^{1/2} \tag{8}$$

$$c_{N,d,95\%max} = \frac{N_{d,95\%max}}{\dot{V}_{s,d} \times t_d} \tag{9}$$

where

$E_{95\%min}$ is the minimum efficiency taking into account the particle counting statistics;

$N_{u,95\%min}$ is the lower limit of the 95 % confidence range of the particle count upstream (calculation according to EN 1822-2);

$N_{d,95\%max}$ is the upper limit of the 95 % confidence range of the particle count downstream (calculation according to EN 1822-2);

$c_{N,d,95\%max}$ is the maximum downstream particle number concentration;

$c_{N,\,u,\,95\%min}$ is the minimum upstream particle number concentration.

If the manufacturer's instructions for the particle counter include coincidence corrections for the measured concentrations, then these shall be taken into account in the evaluation.

For the minimum efficiency, allowance is only made for measurement uncertainty due to low count rates.

The minimum efficiency is the basis of the classification in accordance with EN 1822-1.

Table 1 shows a specimen calculation of the statistical uncertainty for the measurement of the efficiency.

## 10 Test report

The test report for the efficiency test of the filter element shall at least contain the following information:

a) Test object:

1) Type designation, part number and serial number of the filter;

2) Overall dimensions of the filter;

3) Installation position of the filter (gasket upstream or downstream);

b) Test parameters:

1) Temperature and relative humidity of the test air;

2) Nominal air volume flow rate and test air volume flow rate of filter;

3) Most penetrating particle size (MPPS) of filter media at corresponding medium velocity (see EN 1822-3);

4) Aerosol generator (type designation and part number);

5) Test aerosol (substance, median diameter, geometrical standard deviation);

NOTE In case a solid aerosol (e.g. PSL) is used, requirements of A.5 should be met.

6) Particle counter(s), upstream and downstream (type designation and part number(s)) and particle size channel(s) used (in case of OPC);

7) Dilution system for upstream particle counter (type designation, part number);

8) Sampling probe downstream side (geometry, sampling air flow);

9) Reference leak penetration and signal value setting (relevant limit value indicating a leak);

c) Test results

1) Mean differential pressure across the filter at test air volume flow;

2) Mean upstream and downstream particle concentration;

3) Mean integral efficiency and minimum integral efficiency $E_{95\%min}$;

4) Filter class in accordance with EN 1822-1.

**Table 1 — Examples of calculations of the statistical uncertainty when measuring the efficiency**

| Constant upstream test parameters: $\dot{V}_S$ = 23,58 cm$^3$/s; $t_u$ = 50 s; dilution factor $k_D$: 100 | | | | | | | | |
|---|---|---|---|---|---|---|---|---|
| | Filter class | | | | | | | |
| Test parameter | E 10 | E 11 | E 12 | H 13 | H 14 | U 15 | U 16 | U 17 |
| $N_u$ [a, b] | 124 825 | 124 825 | 124 825 | 124 825 | 124 825 | 1 872 380 | 1 872 380 | 1 872 380 |
| $N_{u,95\%min}$ [a, b] | 124 133 | 124 133 | 124 133 | 124 133 | 124 133 | 1 869 698 | 1 869 698 | 1 869 698 |
| $c_{Nu}$ in cm$^{-3}$ | 10 587 | 10 587 | 10 587 | 10 587 | 10 587 | 158 811 | 158 811 | 158 811 |
| $c_{Nu,min}$ in cm$^{-3}$ | 10 529 | 10 529 | 10 529 | 10 529 | 10 529 | 158 583 | 158 583 | 158 583 |
| $t_d$ in s | 250 | 250 | 250 | 250 | 250 | 250 | 1 000 | 1 000 |
| $N_d$ | 6 241 265 | 1 716 348 | 171 635 | 17 163 | 1 716 | 2 575 | 1 030 | 103 |
| $N_{d,95\%max}$ | 6 246 162 | 1 718 916 | 172 447 | 17 420 | 1 798 | 2 674 | 1 093 | 123 |
| $c_{Nd}$ in cm$^{-3}$ | 1 059 | 291 | 29,1 | 2,91 | 0,29 | 0,44 | 0,044 | 0,0044 |
| $c_{Nd,max}$ in cm$^{-3}$ | 1 060 | 292 | 29,3 | 2,95 | 0,30 | 0,45 | 0,046 | 0,0052 |
| $E$ in % | 90 | 97,25 | 99,725 | 99,972 5 | 99,997 25 | 99,999 725 | 99,999 972 5 | 99,999 997 25 |
| $E_{min}$ in % | 89,94 | 97,23 | 99,722 | 99,971 9 | 99,997 10 | 99,999 714 | 99,999 970 7 | 99,999 996 70 |
| $\left\lvert \frac{N_u - N_{u,95\%min}}{N_u} \right\rvert$ in % | 0,55 | 0,55 | 0,55 | 0,55 | 0,55 | 0,14 | 0,14 | 0,14 |
| $\left\lvert \frac{N_{d,95\%max} - N_d}{N_d} \right\rvert$ in % | 0,08 | 0,15 | 0,47 | 1,50 | 4,78 | 3,84 | 6,12 | 19,42 |

[a] Actual particle count without allowing for the dilution factor.

[b] Using poisson statistics.

## 11 Maintenance and inspection of the test apparatus

All components and measuring instruments of the test apparatus shall be regularly maintained, inspected and calibrated.

The necessary maintenance and inspection work is listed in Table 2, and shall be carried out at least once within the time periods specified there. In the event of disturbances which make maintenance work necessary, or after major alterations or refurbishments, inspection work and, if appropriate, calibration work shall be carried out immediately.

Details of the maintenance and inspection work are specified in EN 1822-2, which also contains details of the calibration of all components and measuring instruments of the test apparatus.

**Table 2 — Summary of the maintenance and inspection intervals of the components of the test set-up**

| Component | Type and frequency of the maintenance/inspection |
|---|---|
| Operating materials | Daily checks, exchange after use |
| Test air preparation system:<br>Test channel<br>Entire system<br>Test air filter<br>Exhaust air filter | <br>Annually<br>When maximum pressure drop is reached or in the event of leaks |
| Aerosol generator | According to manufacturers instructions and in accordance with EN 1822-2 |
| Pipes leading aerosol to the measuring instruments | Annual cleaning or after an aerosol change |
| Volume flow rate meter | Annually or after alterations to the instrument |
| Air-tightness of parts of apparatus at low pressure | Check if the zero count rate of the particle counter is unsatisfactory |
| Air-tightness of the testing point switch valve (if present) | Check annually |
| Purity of the test air | Check weekly |

# Annex A
(informative)

# Testing and classification method for filters with MPPS ≤ 0,1 µm (e.g. membrane medium filters)

## A.1 Background

EPA, HEPA and mainly ULPA filters with expanded PTFE Membrane (eMembrane) filter medium have become an alternative to the traditional filters using micro fibreglass medium. In certain critical application fields (e.g. microelectronics), EPA, HEPA and ULPA filters with membrane filter medium have properties that glass filter media do not have. Although these types of filter media are membranes, they have a fibrous structure and hence similar properties for particle retention to glass fibre media. However the user of this type of filters should be aware of two distinct features that may affect its testing and its performance in use.

## A.2 MPPS of filters with Membrane filter medium

The mean size of the fibrous structure of membrane filter media is much smaller than that of micro fibre medium such as glass or synthetic fibre media, resulting in an MPPS, significantly less than 0,1 µm (typically approx. 0,07 µm for a commonly used PTFE membrane). For comparison, the MPPS for a similar micro fibreglass media is typically between 0,1 µm and 0,25 µm. Hence testing this variety of filters at their MPPS (as set out in EN 1822 (all parts)) requires the ability to detect particles as small as 0,05 µm, which is well outside the useful range of laser particle counters. Membrane filters therefore would require the use of e.g. CNCs, sensitive to these small particle sizes. Testing membrane medium filters with commercially available particle generators with e.g. 0,15 µm DEHS particles and laser particle counters with 0,1 µm lower detection limit would typically result in penetrations at least one order of magnitude lower than those, measured at the MPPS. Classification of such filters – according to the principles of EN 1822 (all parts) based on MPPS values – is therefore not directly possible.

## A.3 Penetration consistency and uniformity of Membrane filter medium

Unlike the traditional micro fibreglass media, the membrane medium is a thin (e.g. 0,02 mm) membrane mono-layer of fibrous structure. Since the membrane alone is too delicate to handle, it is layered on to other easier to handle webs that may or may not affect filtration. The consistency and uniformity of a mono-layer regarding its filtration properties in practice is always a problem. Therefore, some manufacturers layer the membrane to partially compensate for spatial non-uniformity and for leaks in each membrane layer. For penetration measurements on mono-layer membrane media one should typically allow local differences in penetration of at least two orders of magnitude.

## A.4 Procedure for testing and classification of filters with Membrane filter media

### A.4.1 Integral Penetration

— **Standard Procedure:**

Define MPPS of a flat sheet of filter medium as per EN 1822-3.

Measure integral penetration of the filter element with membrane filter medium as per this standard with DEHS aerosol at its MPPS (typically between 0,06 µm and 0,08 µm), using corresponding aerosol generation and detection methods (typically CNC's).

NOTE 1 Particle counters used for this procedure/measurement should at least have 50 % counting efficiency at a particle size of MPPS/1,5.

— **Alternative Procedure:**

To be applied if the standard procedure, described above, cannot be followed due to lack of adequate measurement equipment.

Define MPPS and measure penetration at MPPS of a flat sheet of membrane filter medium for the air velocity corresponding to the nominal air flow of the filter element as per EN 1822-3. Also measure penetration for (0,14 ± 0,02) µm particle size of a flat sheet of filter medium as per EN 1822-3. Define correlation (factor) between the two penetration values as follows:

$$F = P_{MPPS} / P_{0,14\mu m}$$

Measure integral penetration of the filter element with membrane filter media as per this standard with DEHS aerosol of a particle size of (0,14 ± 0,02) µm, using laser particle counters with lower detection limit of 0,1 µm.

NOTE 2 For filters with membrane filter media, this is not an MPPS measurement.

### A.4.2 Classification

— **Standard Procedure:**

If the integral penetration has been measured with the Standard Procedure (MPPS), classify the Membrane filter medium filters as per EN 1822-1:2009, Table 1, using the actually measured efficiency values.

— **Alternative Procedure:**

If the integral penetration has been measured with the Alternative Procedure (Non-MPPS), apply the correlation factor F, determined with the flat sheet measurement, to define the calculated MPPS penetration "$P_{MPPS-C}$" as follows:

$$P_{MPPS-C} = F \times P_{0,14\mu m}$$

Classify the membrane filter medium filters as per EN 1822-1:2009, Table 1, using the calculated MPPS penetration $P_{MPPS-C}$.

### A.4.3 Local Penetration

Measure the filter element with membrane filter medium for local penetration by the scan testing method described in EN 1822-4. The leak criteria to be used are those given in EN 1822-1:2009, Table 1, for the filter class in which the filter has been classified as in A.4.2 above. The filter may be leak tested with either its true MPPS aerosol or with a 0,14 µm aerosol since for leak testing the aerosol size does not influence the result significantly.

## A.5 Publication of data and labelling of products with membrane filter media

For publication of data, test reports and labelling of products made with membrane filter media, the following rules shall apply in addition to those, mentioned in Clause 10:

1) Indicate that the filter medium is a membrane medium.

2) Indicate that integral and local efficiency measurement as well as classification was made according to Annex A.

3) Indicate that the integral MPPS penetration was measured with the Standard Procedure (true MPPS) or with the Alternative Procedure (Non-MPPS particle size). The selected procedure must be clearly indicated on the test report.

EXAMPLE 1 Filter tested as per “Standard Procedure”

Penetration 99,999 98 % for MPPS as per EN 1822-5:2009, Annex A, Standard Procedure.
Filter class U16 as per EN 1822-1:2009.

NOTE In Example 1, efficiency and filter class have been determined as per “Standard Procedure” of Annex A, using MPPS aerosol.

EXAMPLE 2 Filter tested as per “Alternative Procedure”

Efficiency 99,999 98 % for MPPS as per EN 1822-5:2009, Annex A, Alternative Procedure.
Filter class U16 as per EN 1822-1:2009.

# Annex B
(normative)

# Testing and classification of filters using media with (charged) synthetic fibers

## B.1 Background

In recent years, synthetic fibre filter media with nominal efficiency in the range of 99,95 % has become available. The high efficiency is typically achieved by using fibres with small diameters and by enhancing the filtration property by electrostatically charging of the fibres. Several commercial and patented processes for charging are known, with different performance claims. Commercially available filters using these media are expected to be considered as alternatives to the traditional High Efficiency filters with glass fibre media.

Unlike actively charged electrostatic precipitators which use external power to maintain its charge, electrostatic charge in these media dissipates with time (through charge neutralization by collected particles). Charge dissipation is particularly evident when liquid, sub-micron or charged particles are used. Consequently, the performance of these charged filters would vary considerably depending on test conditions and especially the type of aerosol material used. Further, their performance deteriorates over time as they collect particles. In some cases, the performance deteriorates by several orders of magnitude when all the effects of charge are dissipated. Since EPA, HEPA or ULPA filters are usually in critical applications and in continuous service for typically many years at a time, these adverse effects on performance must be considered when testing and classifying such filters.

## B.2 Scope

This annex is mandatory for all filter media having a mass content of more than 20 % of synthetic material (i.e. material, other than glass). For wet laid glass fibre filter media, however, it has been proven that the influence of charges at glass fibres is not relevant for their effectiveness. Therefore, wet laid glass fibre filter media are not subjected to this test.

## B.3 Procedure for testing and classification of HEPA and ULPA filters using media with (charged) synthetic fibres

1) Flat sheet filter medium MPPS penetration tests should be performed as per EN 1822-3 with a statistically sufficient number of flat sheet filter medium samples, in new, possibly charged condition.

2) After the test in new, possibly charged condition, the flat sheet filter medium samples must be discharged, using the discharging procedure given in Annex A of EN 779:2002. Other discharging procedures may be used if it can be proven that this alternative method discharges the filter medium to the same degree as the EN 779:2002, Annex A reference procedure.

3) Flat sheet filter medium MPPS penetration tests as per EN 1822-3 should now be repeated with the discharged flat sheet filter medium samples.

4) The penetration and classification of the entire filter element with charged synthetic fibre filter media, must be reported according to the average measurement values achieved with the discharged flat sheet filter medium samples if the penetration in discharged condition (B.3, item 3) above) is more than a factor of 2 larger than that in charged condition (B.3, item 1) above).

## B.4 Publication of data and labelling of products for HEPA and ULPA filters using media with (charged) synthetic fibres

If the penetration in discharged condition is more than a factor of 2 larger than that in charged condition, the following rules shall apply in addition to those, mentioned in Clause 10, for the publication of data and labelling of products made with media with (charged) synthetic fibres:

1) Indicate that the filter medium contains charged synthetic fibres as per Annex B of EN 1822-5:2009.

2) The MPPS penetration must be shown on all relevant documents and labels as the value(s) measured in fully discharged condition of the filter medium as per Annex B of EN 1822-5:2009.

3) The filter classification must be determined and indicated on all relevant documents and labels on the bases of penetration values, measured in fully discharged condition of the filter medium.

4) The MPPS efficiency in new (charged) condition of the filter medium may be additionally indicated for information, as long as it is clearly stated that this value is relevant in new, charged condition of the filter medium only. The MPPS efficiency value used for new, charged condition of the filter medium may be gained from measurement made on the entire filter unit as per this standard or by using the average value of the measurements on the five flat sheet filter medium samples (see B.3, item 1) above).

EXAMPLE 1

Efficiency 99,98 % for MPPS in discharged condition as per Annex B of EN 1822-5:2009.
Filter class H12 as per EN 1822-1:2009 and Annex B, EN 1822-5:2009.

NOTE 1 In Example 1, efficiency and classification are given for discharged condition only.

EXAMPLE 2

Efficiency 99,98 % for MPPS in discharged condition as per Annex B of EN 1822-5:2009.
Efficiency 99,998 % for MPPS in new, charged condition as per Annex B of EN 1822-5:2009.
Filter class H12 as per EN 1822-1:2009 and Annex B, EN 1822-5:2009.

NOTE 2 In Example 2 efficiency is given for discharged AND charged conditon but classification, according to EN 1822-1 and Annex B of this standard, is always and only given for discharged condition.

# Bibliography

[1] EN ISO 9000, *Quality management systems — Fundamentals and vocabulary (ISO 9000:2005)*

[2] ISO 2859-1, *Sampling procedures for inspection by attributes — Part 1: Sampling schemes indexed by acceptance quality limit (AQL) for lot-by-lot inspection*

*This page has been intentionally left blank*

# BSI - British Standards Institution

BSI is the independent national body responsible for preparing British Standards. It presents the UK view on standards in Europe and at the international level. It is incorporated by Royal Charter.

**Revisions**

British Standards are updated by amendment or revision. Users of British Standards should make sure that they possess the latest amendments or editions.

It is the constant aim of BSI to improve the quality of our products and services. We would be grateful if anyone finding an inaccuracy or ambiguity while using this British Standard would inform the Secretary of the technical committee responsible, the identity of which can be found on the inside front cover. Tel: +44 (0)20 8996 9000. Fax: +44 (0)20 8996 7400.

BSI offers members an individual updating service called PLUS which ensures that subscribers automatically receive the latest editions of standards.

**Buying standards**

Orders for all BSI, international and foreign standards publications should be addressed to Customer Services. Tel: +44 (0)20 8996 9001. Fax: +44 (0)20 8996 7001 Email: orders@bsigroup.com You may also buy directly using a debit/credit card from the BSI Shop on the Website http://www.bsigroup.com/shop

In response to orders for international standards, it is BSI policy to supply the BSI implementation of those that have been published as British Standards, unless otherwise requested.

**Information on standards**

BSI provides a wide range of information on national, European and international standards through its Library and its Technical Help to Exporters Service. Various BSI electronic information services are also available which give details on all its products and services. Contact Information Centre. Tel: +44 (0)20 8996 7111 Fax: +44 (0)20 8996 7048 Email: info@bsigroup.com

Subscribing members of BSI are kept up to date with standards developments and receive substantial discounts on the purchase price of standards. For details of these and other benefits contact Membership Administration. Tel: +44 (0)20 8996 7002 Fax: +44 (0)20 8996 7001 Email: membership@bsigroup.com

Information regarding online access to British Standards via British Standards Online can be found at http://www.bsigroup.com/BSOL

Further information about BSI is available on the BSI website at http://www.bsigroup.com.

**Copyright**



BSI Group
Headquarters 389
Chiswick High Road,
London, W4 4AL, UK
Tel +44 (0)20 8996 9001
Fax +44 (0)20 8996 7001
www.bsigroup.com/
standards